2005 DAS D

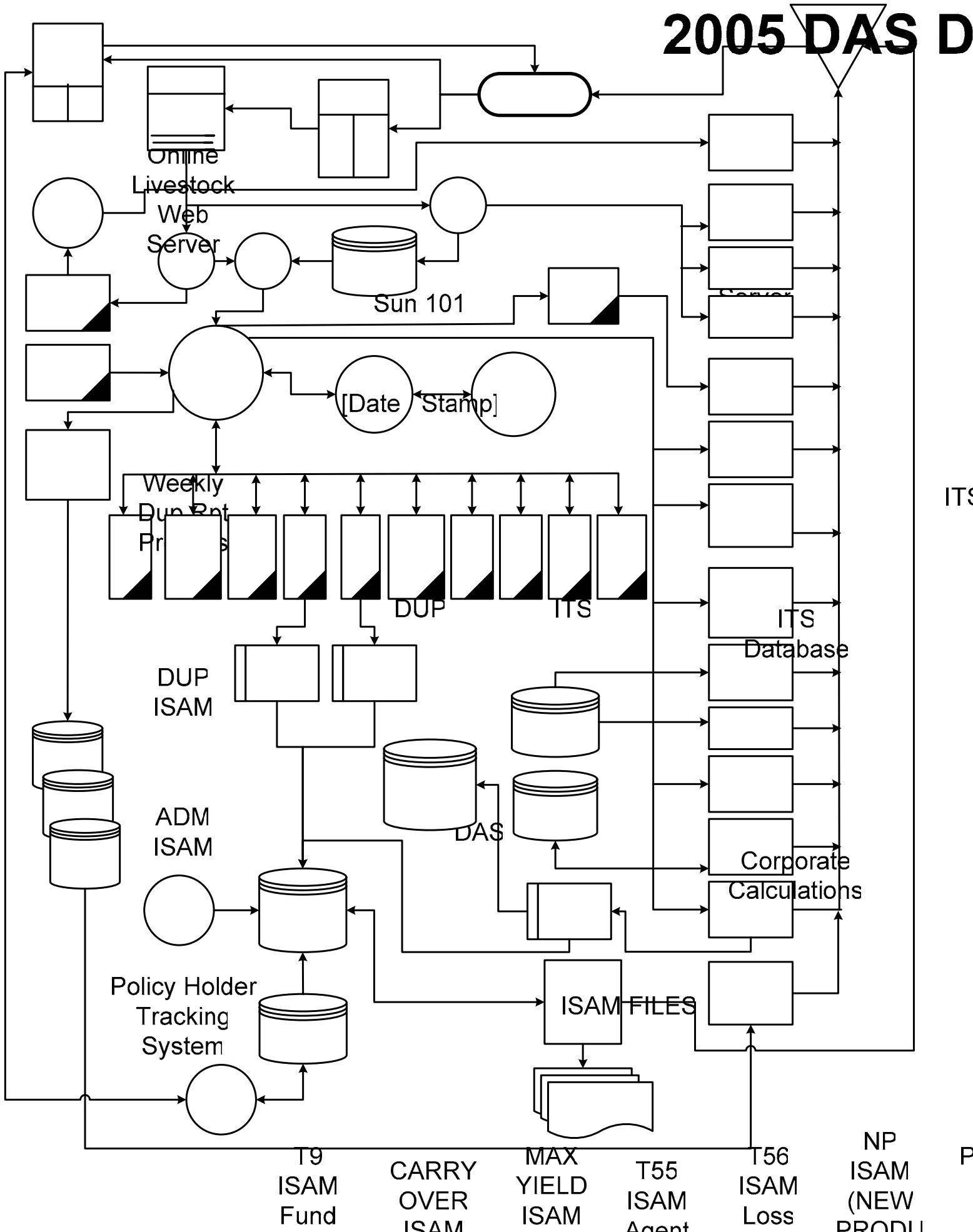
Online
Livestock
Web
Server
Sun 101
[Date Stamp]
Weekly
Dup Rpt
Pr s
DUP
ITS
ITS
Database
DUP
ISAM
DAS
ADM
ISAM
Corporate
Calculations
Policy Holder
Tracking
System
ISAM FILES
T9
ISAM
Fund
CARRY
OVER
ISAM
MAX
YIELD
ISAM
T55
ISAM
Agent
T56
ISAM
Loss
NP
ISAM
(NEW
PRODU